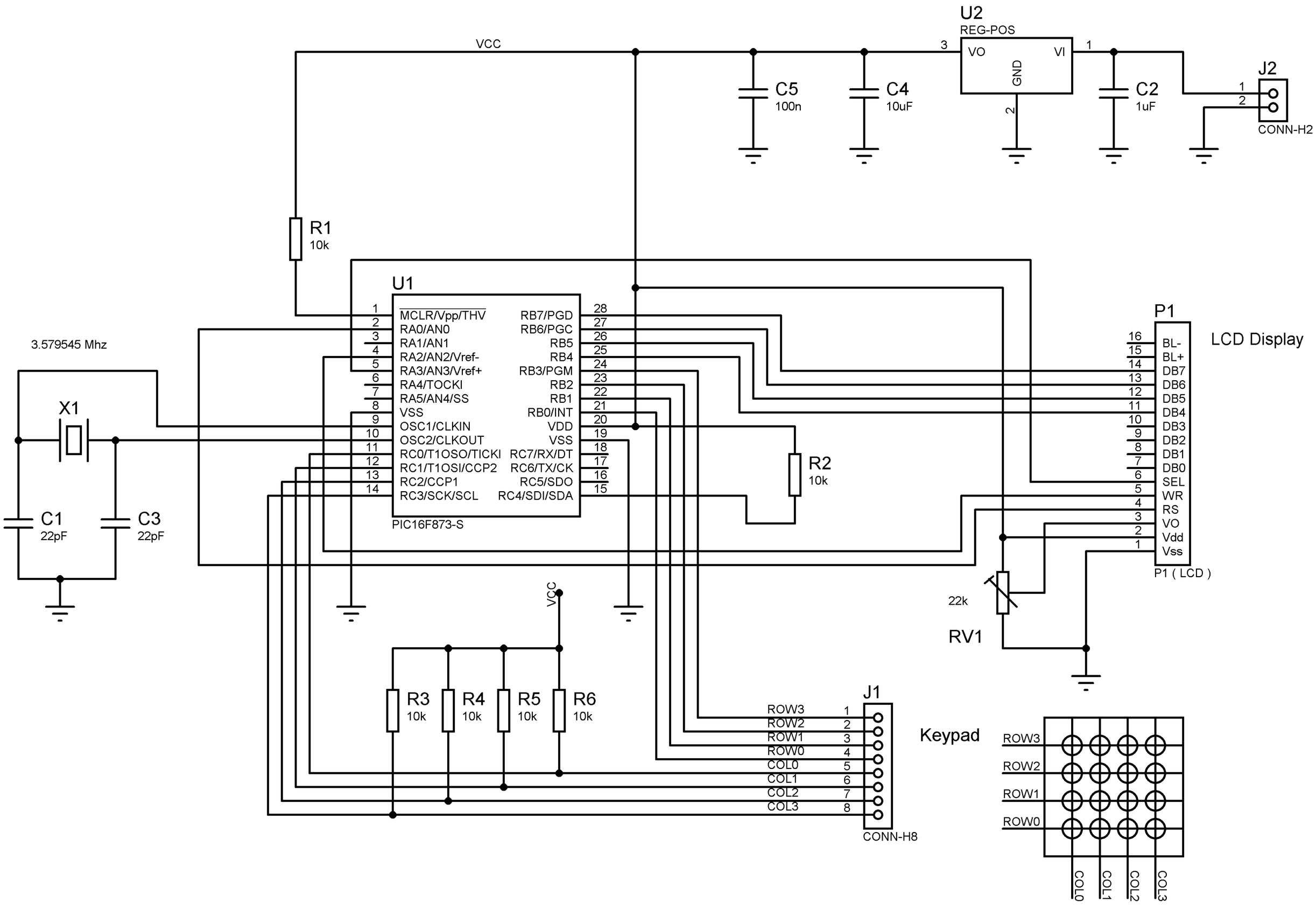
U2
REG-POS
VO
VI
GND
3
1
2
VCC
C5
100n
C4
10uF
C2
1uF
J2
CONN-H2
R1
10k
U1
MCLR/Vpp/THV
RA0/AN0
RA1/AN1
RA2/AN2/Vref-
RA3/AN3/Vref+
RA4/TOCKI
RA5/AN4/SS
VSS
OSC1/CLKIN
OSC2/CLKOUT
RC0/T1OSO/TICKI
RC1/T1OSI/CCP2
RC2/CCP1
RC3/SCK/SCL
RB7/PGD
RB6/PGC
RB5
RB4
RB3/PGM
RB2
RB1
RB0/INT
VDD
VSS
RC7/RX/DT
RC6/TX/CK
RC5/SDO
RC4/SDI/SDA
PIC16F873-S
3.579545 Mhz
X1
C1
22pF
C3
22pF
R2
10k
P1
LCD Display
BL-
BL+
DB7
DB6
DB5
DB4
DB3
DB2
DB1
DB0
SEL
WR
RS
VO
Vdd
Vss
P1 (LCD)
22k
RV1
VCC
R3
10k
R4
10k
R5
10k
R6
10k
J1
ROW3
ROW2
ROW1
ROW0
COL0
COL1
COL2
COL3
CONN-H8
Keypad
ROW3
ROW2
ROW1
ROW0
COL0
COL1
COL2
COL3