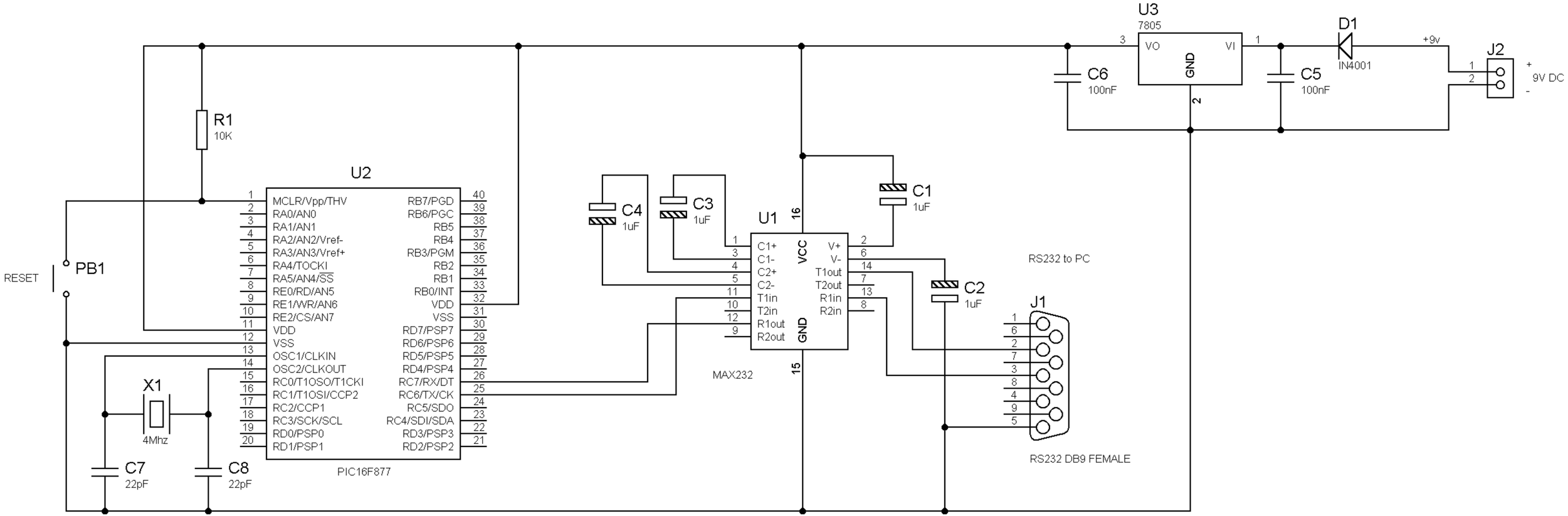
U3
7805
VO
VI
GND
C6
100nF
C5
100nF
D1
IN4001
+9v
J2
9V DC
R1
10K
U2
MCLR/Vpp/THV
RA0/AN0
RA1/AN1
RA2/AN2/Vref-
RA3/AN3/Vref+
RA4/TOCKI
RA5/AN4/SS
RE0/RD/AN5
RE1/WR/AN6
RE2/CS/AN7
VDD
VSS
OSC1/CLKIN
OSC2/CLKOUT
RC0/T1OSO/T1CKI
RC1/T1OSI/CCP2
RC2/CCP1
RC3/SCK/SCL
RD0/PSP0
RD1/PSP1
RB7/PGD
RB6/PGC
RB5
RB4
RB3/PGM
RB2
RB1
RB0/INT
VDD
VSS
RD7/PSP7
RD6/PSP6
RD5/PSP5
RD4/PSP4
RC7/RX/DT
RC6/TX/CK
RC5/SDO
RC4/SDI/SDA
RD3/PSP3
RD2/PSP2
PIC16F877
RESET
PB1
X1
4Mhz
C7
22pF
C8
22pF
C4
1uF
C3
1uF
U1
C1+
C1-
C2+
C2-
T1in
T2in
R1out
R2out
VCC
GND
V+
V-
T1out
T2out
R1in
R2in
MAX232
C1
1uF
C2
1uF
RS232 to PC
J1
RS232 DB9 FEMALE